Tel.: 49 2162 40025
Fax: 49 2162 40035
info@dsl-electronic.de
www.dsl-electronic.de

DSL electronic® GmbH

# Stabilized Battery Charging Unit AL... Ranges: 12V, 24V

**5A, 10A, 15A, 20A, 35A**

- **Power supply: 231 or 400V mains**
- **High efficiency ( 80 - 90% )**
- **Resistant to sustained short-circuit**
- **Soft start of power circuit**
- **Heavy charging up to 33V**
- **Overheating protection**
- **Characteristics acc. to DIN 41773**
- **Mains transformer acc. to EN 61558**

## Application

The battery charging unit AL. is used for charging high-quality lead, lead-gel or nickel-cadmium batteries and for the DC supply of standing loads in switch cabinets. The charging unit is suitable for emergency power supplies and diesel engine batteries whose starter and control batteries must be loaded according to the DIN characteristic curve. Special attention was given to the operating safety and long-term stability of the charging unit, the components having been selected and dimensioned accordingly. The charging unit can be used with normal mains (0-231V) and three-wire mains supplies (0-400V) and at increased environmental temperatures of up to 55°C ( see **temperature derating diagram** ).
The output of the battery charging unit is connected directly to the battery or DC supply via protective equipment and mounted to the angles provided for it on the assembly plate of the switch cabinet.

## Charging

**Normal Charging:** The empty battery is first charged at the constant current set. Before the preset final charging voltage is reached, the current gradually decreases. The gasing of the battery is limited and the continually reduced current causes the voltage to rise slowly until it reaches the final charging voltage. This characteristic curve ensures the gradual charging of the battery.
**Heavy Charging:** At intervals specified by the manufacturer, nickel-cadmium batteries are subjected to heavy charging at an increased charging voltage up to 33V. For this purpose the heavy charging terminal **ST** is short-circuited, it being necessary to ensure that the charging process is terminated via automatic opening of the contact on completion of heavy charging. The equipment connected must not be impaired by the voltage used for heavy charging. The height of the final charging voltage used for heavy charging is set via the potentiometer ST (in no-load operation). It must be sure that a charger with suitable power will be used because on same current but higher voltage the rated power consumption will overdriven up to 37% (see temperature derating diagram).

## Power Supply Operation

The battery charging unit AL can also be used for power supply operation or mixed applications. Here please note that in case of mixed application a continuous dc current load should not be higher than 30% of maximum load. If the remaining current for charging is to low the next bigger charging unit should be used. Because of too low remaining charge current a next greater battery charger should be choosen. When only power supplying will be used the unit should be loaded only to 50% of its rated power (see temperature derating diagram).

## Settings

The AL charging unit is set to a battery voltage of 26.6V (13.5V) in no-load operation and the charging current is set to Imax before the unit leaves the factory. The controls for this are located under the removable aluminium data plate. The final charging voltage is adjusted in no-load operation via the adjuster **U** with aid of a 1-class meter. A suitable load resistance (or empty battery) should be used to set the current (Adjuster **I**). Remark: For compensation charging acc. to DIN57510 following values are recommended for lead batteries 2,23V (+/-1%) / cell and for nickel-cadmium batteries 1,38 – 1,40V / cell.

## Series / Parallel Connection

The output current or output voltage can be increased by connecting any desired number of AL charging units to the outputs in parallel or in series. In order to ensure that the units are subjected to the same load in parallel operation, the final charging voltage in each case must be set to the same value and in serial connection the same adjustment of maximum currents.

## Technical Data

| Type | Final Charging max. | Consumption Current (max) | P (max) | Fusing Prim. (Q1) an 231V | 400V | Sec. (Q2) ( acc. EN 60898 ) | | Weight | Dimensions ( mm , B x H x T) |
|---|---|---|---|---|---|---|---|---|---|
| **AL0512** | 12 - 33V | 5A | 100W | 4AC | 4AB | 10AB | | 5,5kg | 120x125x155 |
| **AL0524** | 12 - 33V | 5A | 200W | 6AC | 4AC | 10AB | | 5,5kg | 120x125x155 |
| **AL1012** | 12 - 33V | 10A | 200W | 6AC | 4AC | 16AB | | 5,5kg | 120x125x155 |
| **AL1024** | 12 - 33V | 10A | 400W | 8AC | 6AC | 16AB | | 5,5kg | 120x125x155 |
| **AL1524** | 12 - 33V | 15A | 600W | 10AC | 8AC | 20AB | | 7,3kg | 120x125x180 |
| **AL2024** | 12 - 28V | 20A | 600W | 16AC | 8AC | 25AB | | 7,3kg | 120x125x180 |
| **AL2033** | 12 - 33V | 20A | 850W | 16AC | 8AC | 25AB | | 10,2kg | 150x155x185 |
| **AL3524** | 12 - 33V | 35A | 1400W | 16AD | 16AD | 50AB/C | | 18,1kg | 180x185x250 |

In case of fuse falling under unfavorable conditions (e.g. inrushcurrent of transformer or on-switching of starter during discharged battery) a bigger rated fusing could be choosen without getting safety problems.

| | |
|---|---|
| Supply voltage | 231V 50/60Hz und 400VAC (-10 +15%), Other voltages available on request |
| Charging parameters | IU (Wa)-param. Acc. to DIN 41773 (< +/- 1% tolerance) and DIN 57510<br>Wa = dropping characteristic in U-range (appr. 2% drop) with off setting |
| MTBF (lifetime) | Continuous operation, MTBF according to power consumption and environmental temperature<br>30.000 to more than 100.000 h. |
| Efficiency | 80 - 90% |
| Softstart | Appr.0,5 sec. after switching on the load current will be switched on |
| Correction time | Load dependent, appr. 100 to 500 msec. |
| Rated Output Power<br>(see derating diagram) | AL0512 = 60W, AL1012 = 120W, AL1024 = 240W, AL1524 = 360W<br>AL2024 = 384W (80%), short time 100% (480W)<br>AL2033 = 480W, AL3524 = 840W |
| Output hum | with ohmic load (half rated load) appr. 2VAC (battery not connected) |
| Overload | Automatic power limitation, short circuit proof, charger switches on again<br>after overload condition is cleared (fold back) without output overvoltage swing<br>Automatical switch on after overload with < 50% ohmic load in other case 100% |
| Temperature overload | In case of overheating the load current will be limited, after the overheating has been cleared<br>the fully output current is available again |
| Polarity protection | Appr. 6A or 50A (100ms) [battery feedback current] |
| Final charging voltage | Tolerance 0,1% / 10°C |
| Ambient temperatures | -20 °C up to +55°C, up to 70°C with full operation but output current falls to low values |
| Storing temperatures | -40°C bis + 85°C |
| Relative air humidity | 95% |
| Kind of protection | IP00 |
| Maintenance | Maintenancefree |
| Mains isolating | EN 61558 (Savety transformers) |
| General regulations | EN 50178 (Units in power current installation) |
| Radio interference | EN 55011:2016, A1:2017, A11:2020 |
| EMV | EN 61000-4-3 and EN 61000-4-6 |

**Mounting:** The charging unit can be mounted in any desired position. In order to ensure a maximum service life, it is recommended to mount the unit in such a way that the aluminium cooling plate is perpendicular ( to the earth's ) surface. Because on the open metal parts of charging unit the temperature rise to 70°C in case of maximum power consumption the customer should look to precautions i.E. against application of plastic materials in the near environment.

## Circuit Diagram

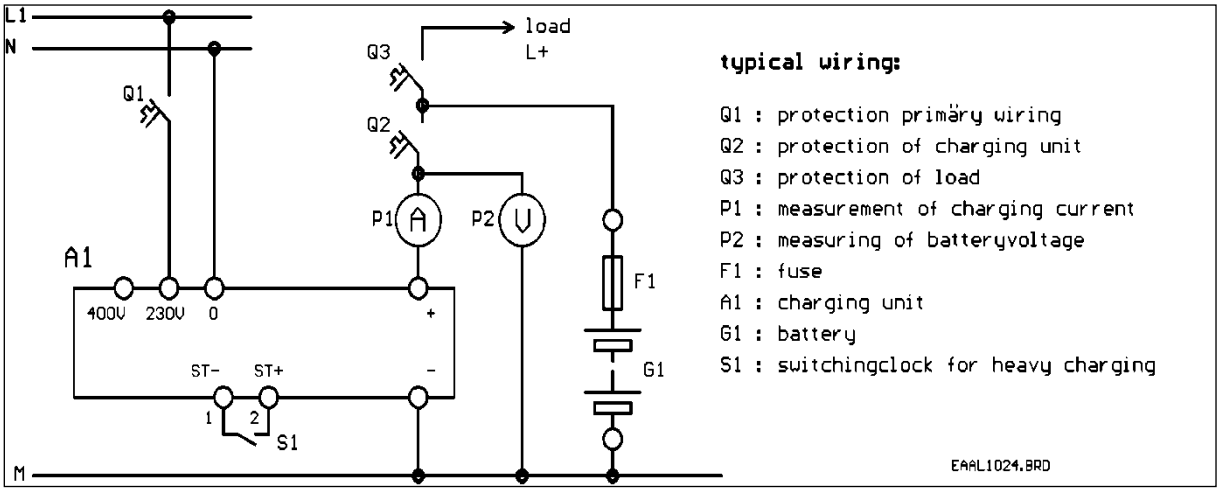

## Safety Remarks

Before installation of battery charger the user should look to the preset final charging voltage and the maximal charging current whether it fits with the choosen type of battery. Otherwise higher gassing or overheating of battery could be occurred with risk of detonate or fire. Fire could also develop from spark discharge i.e. by disconnections of the wiring to the battery or the current from battery flows without any protection ( fuse F1 be missing) into the battery charger i.e. by wrong terminal connection or short circuit inside the secondary section of charger.

## Temperature – Derating

For the current consumption from battery charger / power supply unit it is recommended to choose the maximum long time power depending on ambient temperatures directly beside the unit by the following diagram. The derating values refer to the rated load power = rated output voltage x rated current. With this a rought indication for the choosen charger / power supply unit to be made.
The output current of unit is be fixed to the maximum rated value (see technical data). But with rising of output voltage up to 33V (heavy charging) a higher output power occured and leads to higher temperatures of unit on the long run. With internal temperature measurements the maximum temperature of unit will be hold (no overheating or damage be occurred) but the output current goes down. To avoid too low output current, calculation of the output power should be done and in doubt it is better to choose a bigger unit.

**Temperature dependent load reduce**